Intellectual Property Office

Certificate of Registration for a UK Design

Design number: 6407994

Grant date: 06 December 2024

Registration date: 28 November 2024

This is to certify that,

in pursuance of and subject to the provision of Registered Designs Act 1949, the design of which a representation or specimen is attached, had been registered as of the date of registration shown above in the name of

Mrs. ARCHANA VAKKODEKALAM CHANDRAN, Mrs. JABEEN BABU, Mrs.

ANISHA CHANDRAN, Mrs. GEETHA GUNASEELAN, Mrs. KATHIROLI

KASINATHAN, Ms. NANDHINI KARUPPAIYA, Mrs. POOJA SELVAKUMAR

in respect of the application of such design to:

PORTABLE HANDY SEWING AND EMBROIDERY MACHINE

International Design Classification:
Version: 14-2023
Class: 15 MACHINES, NOT ELSEWHERE SPECIFIED
Subclass: 06 TEXTILE, SEWING, KNITTING AND EMBROIDERING MACHINES, INCLUDING THEIR INTEGRAL PARTS

Adam Williams
Comptroller-General of Patents, Designs and Trade Marks
Intellectual Property Office
The attention of the Proprietor(s) is drawn to the important notes overleaf.

Representation of Designs

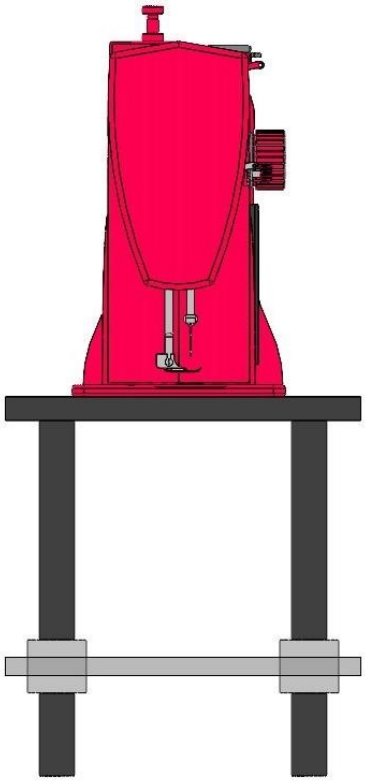

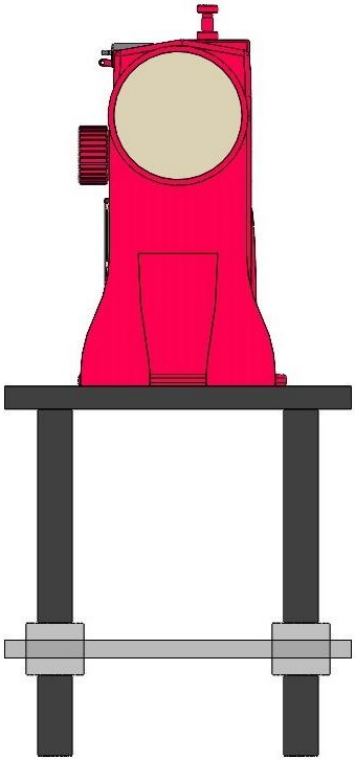

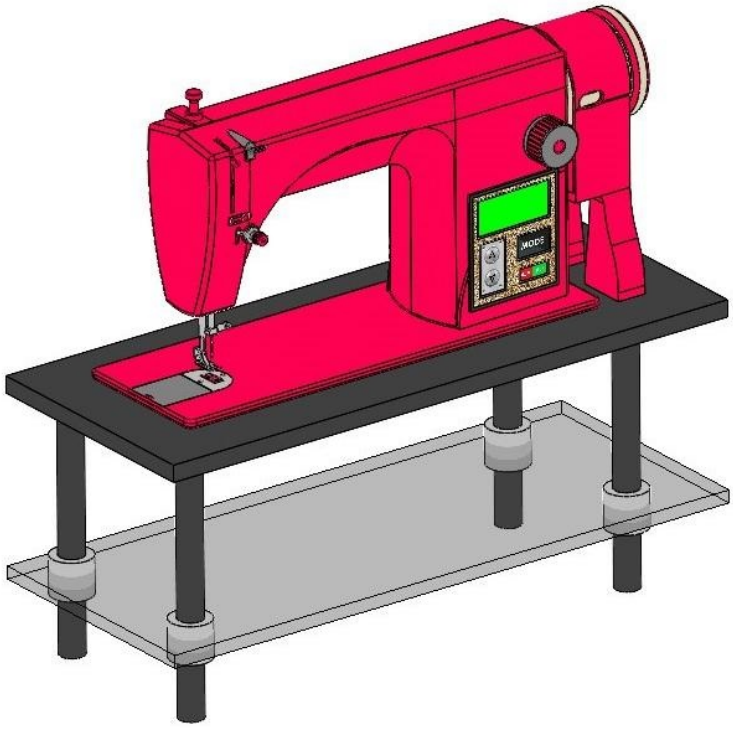
MODE

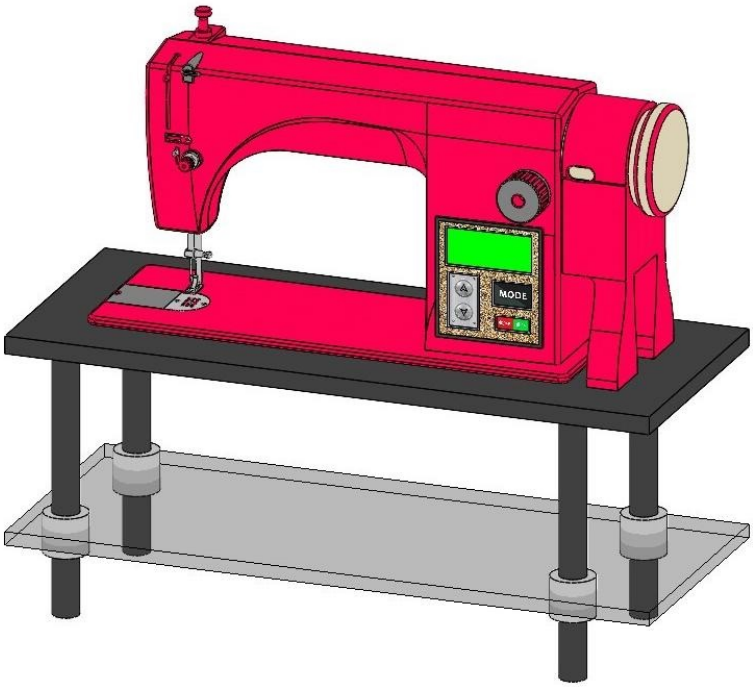
MODE

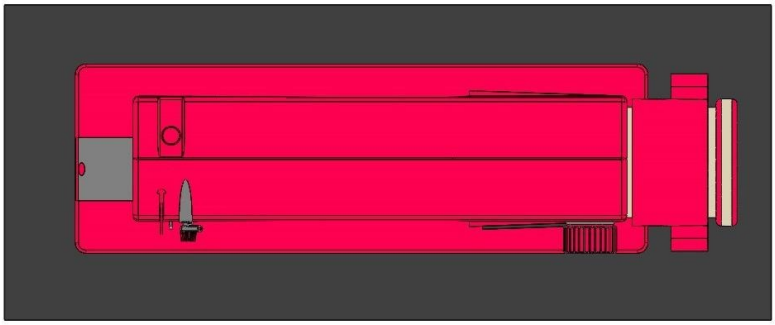

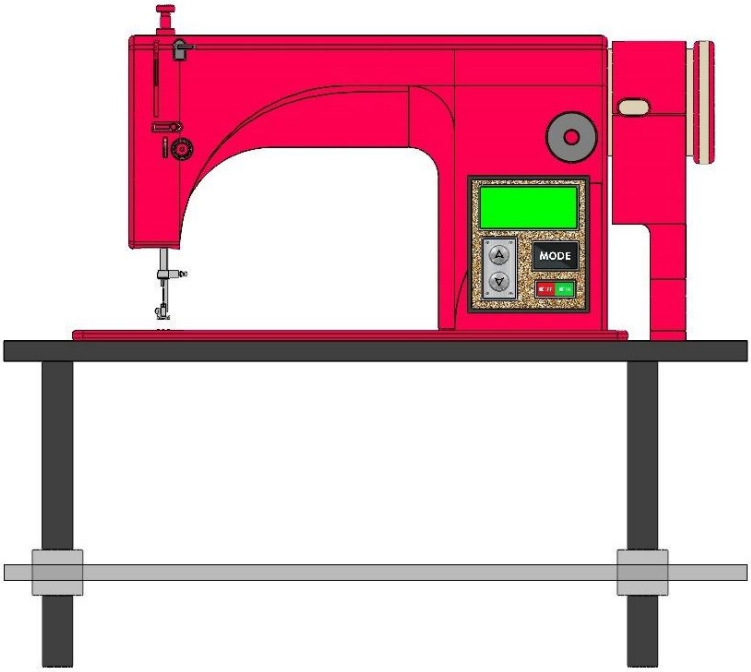
MODE